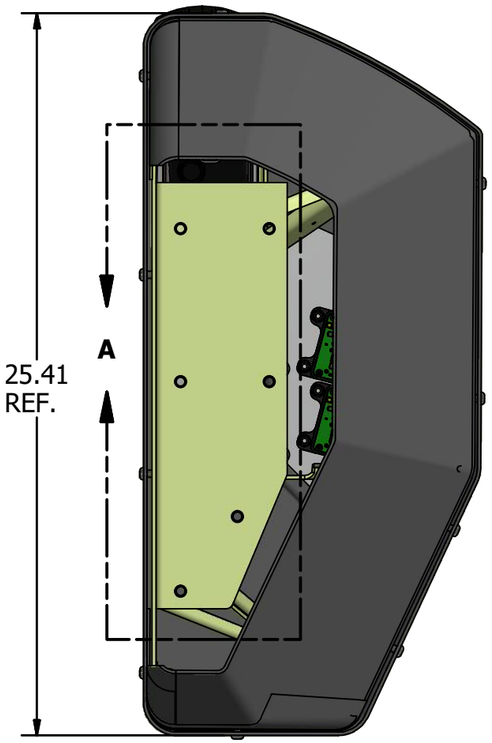

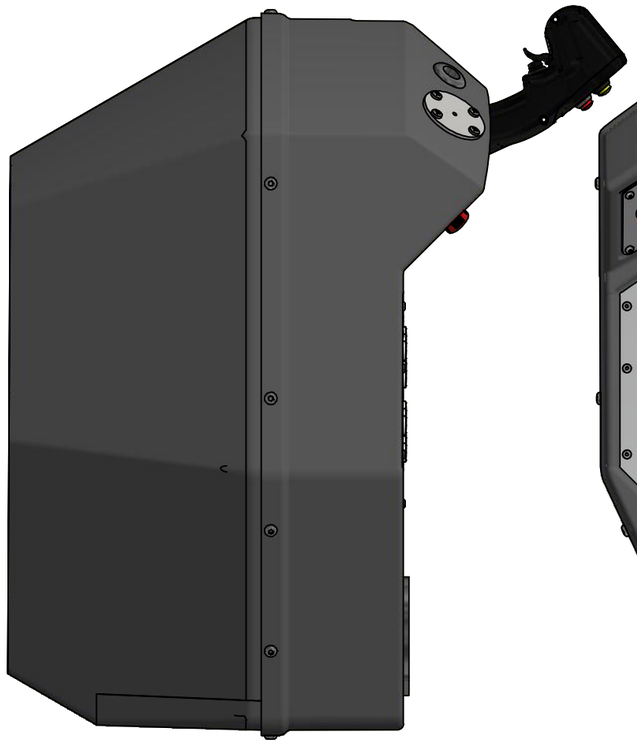

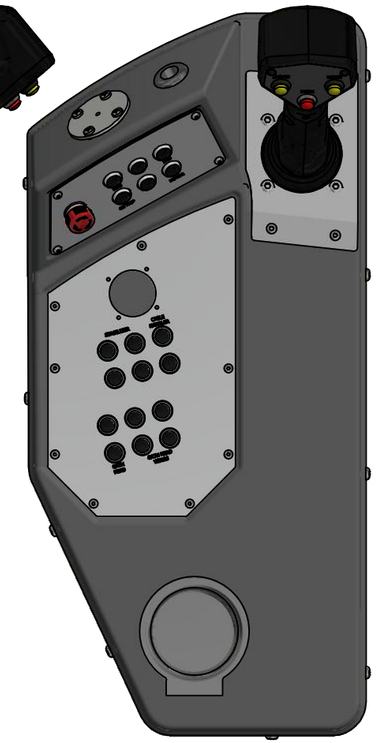

- LEFT HAND SEAT ARMREST ASSEMBLY - FULL METAL SUBSTRUCTURE
- LEFT J1939 CAN JOYSTICK BASE, CUSTOM FUL HANDLE ASSEMBLY
- DISPLAY OPTION

SCALE 3:16

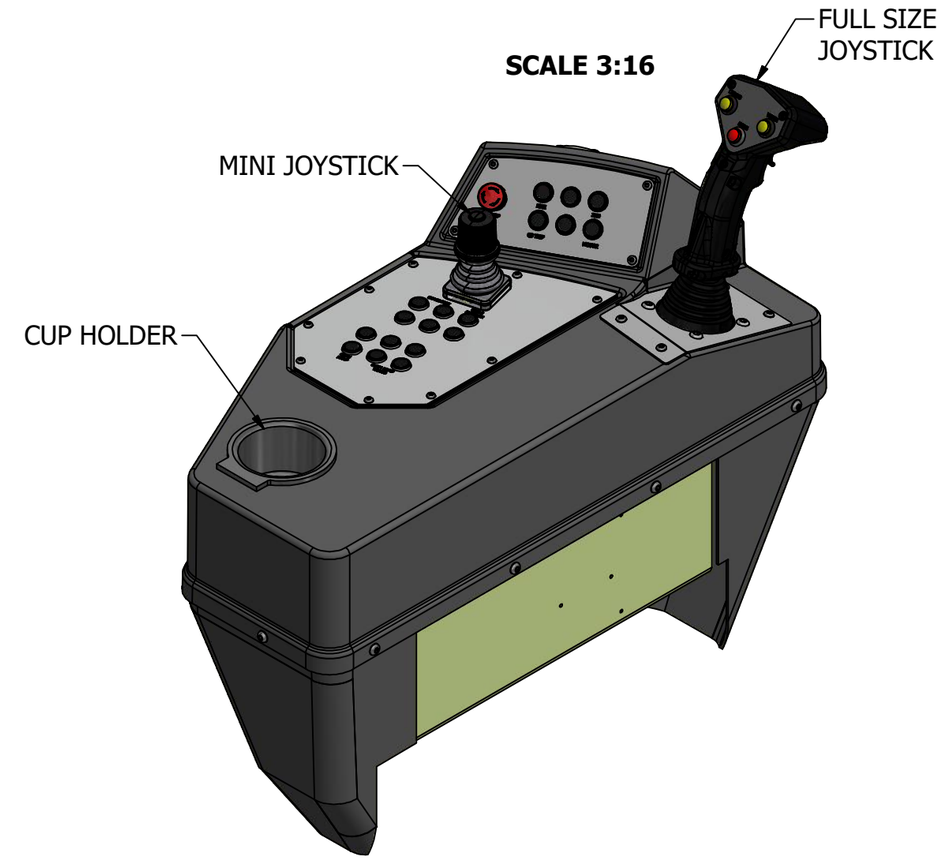

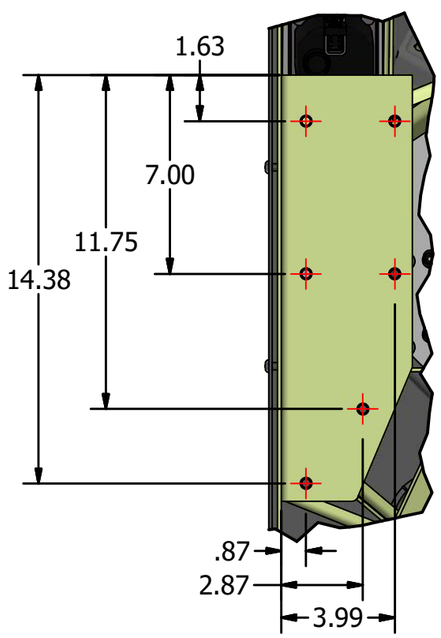

DETAIL A
SCALE 3:16

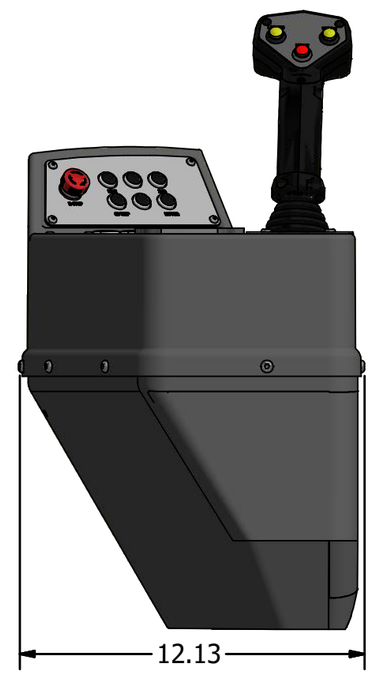

UNLESS OTHERWISE SPECIFIED DIMENSIONS ARE IN INCHES

WIRE LENGTH TOLERANCES SPEC.= IPC/WHMA-A-620B
- ≤ 1ft +1in -0in
- > 1ft-5ft +2in -0in
- > 5ft-10ft +4in -0in
- > 10ft-25ft +6in -0in
- > 25ft +5% -0%

THIRD ANGLE PROJECTION

- FRACTIONS ± 1/16in ± 1.59mm
- TOLERANCES ON DECIMALS:

	1 PLACE	2 PLACE	3 PLACE
in	± .030	± .010	± .005
mm	± .76	± .25	± .13

- ANGULAR DIMENSIONS ± 1 DEG
- REMOVE BURRS
- BREAK EDGES 0.01in 0.25mm MAX
- MAX SURFACE ROUGHNESS 125 √

ORIGINATED BY: KJOHNSON
ORIGINATION DATE: 7-16-2019
PROJECT ENGINEER:
ACCOUNT MANAGER:
MATERIAL:
COATING/PLATING:
CUSTOMER PART NUMBER:

ALL TECHNICAL DATA ON THIS DRAWING IS THE PROPERTY OF GS GLOBAL RESOURCES INC. AND SHALL NOT BE USED BY OTHERS FOR MANUFACTURE, PROCUREMENT, OR DISCLOSURE WITHOUT THE WRITTEN PERMISSION OF: GS GLOBAL RESOURCES INC.

GS GLOBAL RESOURCES
MUKWONAGO, WI 53149

DRAWING TITLE:
LEFT SIDE ARMREST WITH CUSTOM J1939 JOYSTICK

SHT SIZE	DRAWING NUMBER	REV
B	GS19090-002	A

DRAWING REFERENCE: -
SCALE: 3:16
SHEET INFO: 1 OF 1

TITLE BLOCK REVISION DATE: 10-9-2018